Honda Pioneer 1000

Dual Battery Wiring Diagram

Includes Battery Isolator, Dual Volt Meter & Relay, Stinger Relay, and Fuse Box
Added Winch, dome lights with dimmer, and backup lights

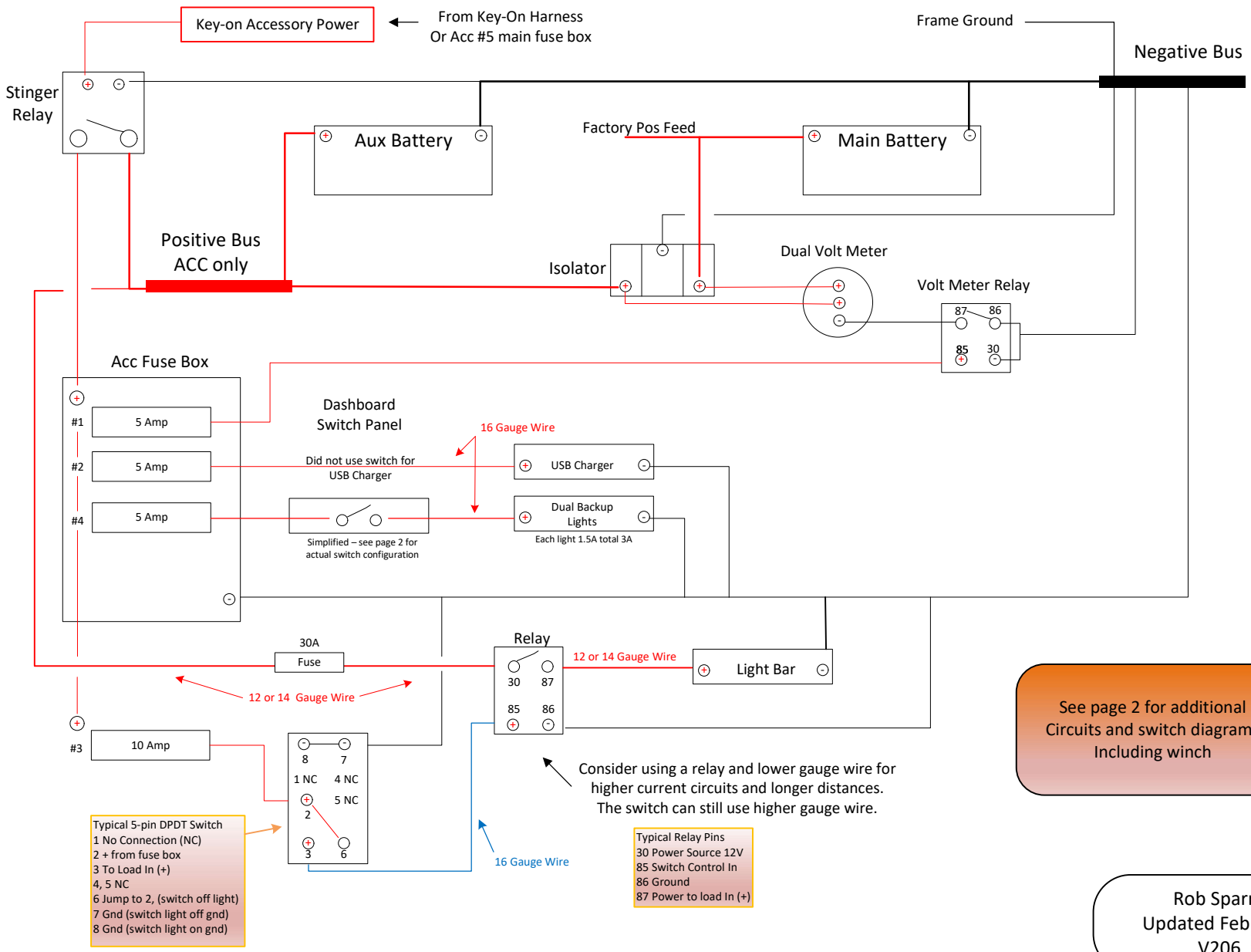

See page 2 for additional
Circuits and switch diagrams
Including winch

Rob Sparre
Updated Feb 2021
V206

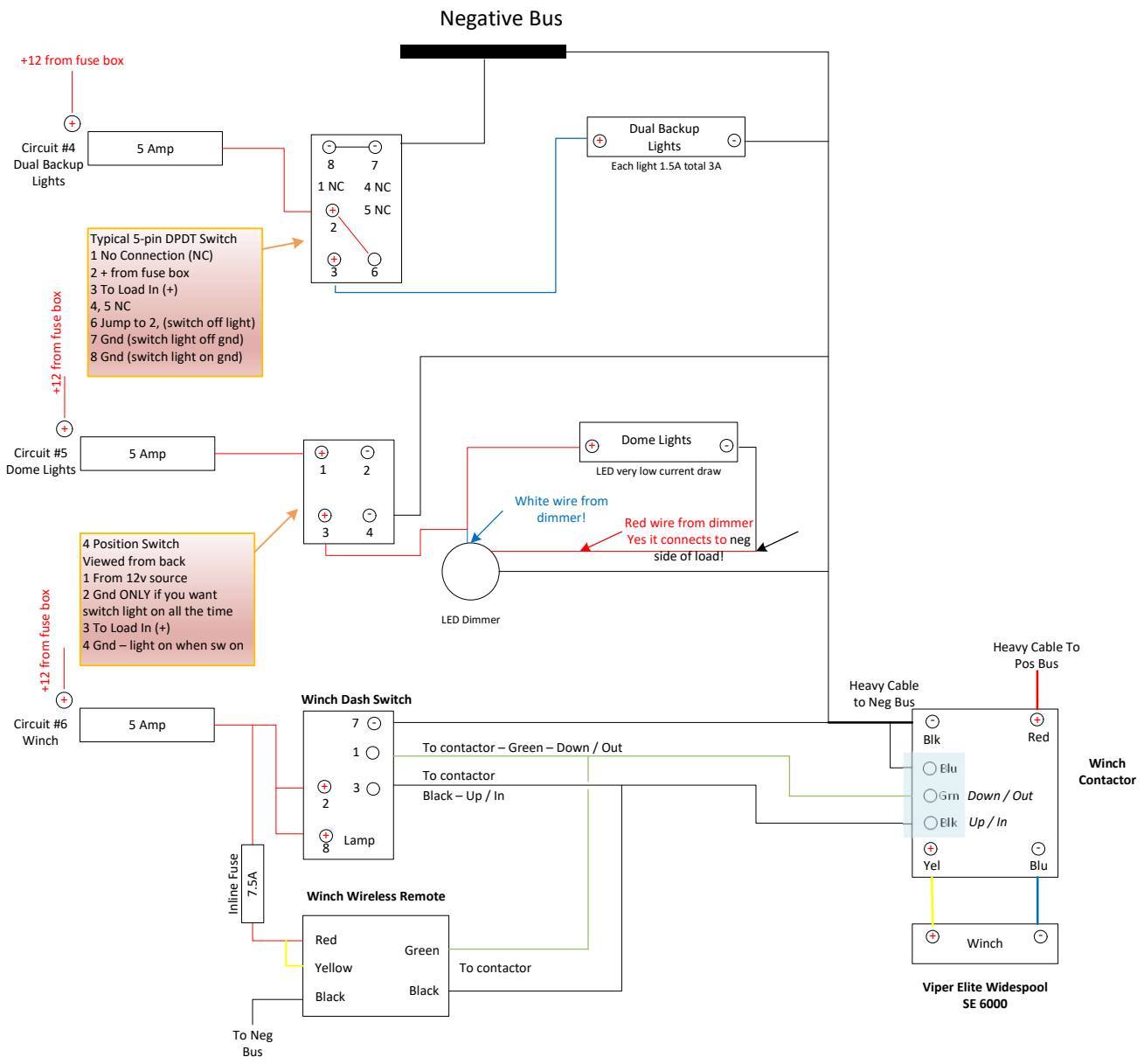

Honda P1K-5
Rob Sparre
Wiring Page 2